Check valve series

Design Feature

Design and manufacture: BS 1868, API 6D, API 602, ASME B16.34.
Face–to–Face dimension: ASME B16.10, BS 2080, ISO 5752, JIS B2002, DIN 3202.
Flanged End: ASME B16.5, 26"and larger sizes according to ASME B16.47 Series A or Series B， JIS B2212, B2214, EN 1092–1.
Butt–weld ends: ASME B16.25; Socket weld ends: ASME B16.11; Threaded ends: ANSI B1.20.1.
Shell Wall Thickness: BS 1868, API 6D, ASME B16.34.
Inspection and Test: API 598, BS EN 12266, ISO 5208

Casting Steel Material

Visual check for cast steel material includes: surface quality, dimension, chemical properties, mechanical performance, non–destructive testing to ensure that the comprehensive performance of raw materials comply with the relevant ASTM, BS, EN, JIS standards.

Body

The design provides the whole structure of low flow resistance channel structure, enables the body stiffness and strength to bear the nominal piping pressure and stress loading, the valve body wall thickness design complies with BS 1868, ASME B16.34 or relative with sufficient margin corrosion resistance for the medium.

Bonnet

Bonnet can be designed with a variety of seal structure of body connection to meet the needs of different operating conditions, the structure can be equipped to connect with jacketed, flat, spiral wound or metal ring gasket, or pressure–seal valve bonnet for Calss900/1500/2500.

Seat

Seat structure can be designed as per user requirements as a whole alloy steel materials pressed–in sealing structure, welding sealing, or screw connection in assembly. The austenitic stainless steel body material can be provided with integral seat.

Disc components

Disc components include: plate, hanger, washer, gland or locking nut, locking pin. Swing check valve can be maintained on pipeline directly, and its plate design applies often the conventional rigid parallel seal structure.

Seat and other seal material

The choice of materials for the seat and other seal material can be as per API or relative standard or users design and manufacturing requirements.

Bonnet and body seal structure

Class 150,300,600: spiral stainless steel and flexible graphite wound gasket
Class 900 and above: metal ring gasket
According to specific operating conditions (medium, medium temperature and pressure), other sealing material can be applied.

Class 150 / JIS10K Bolted cover, swing type disc

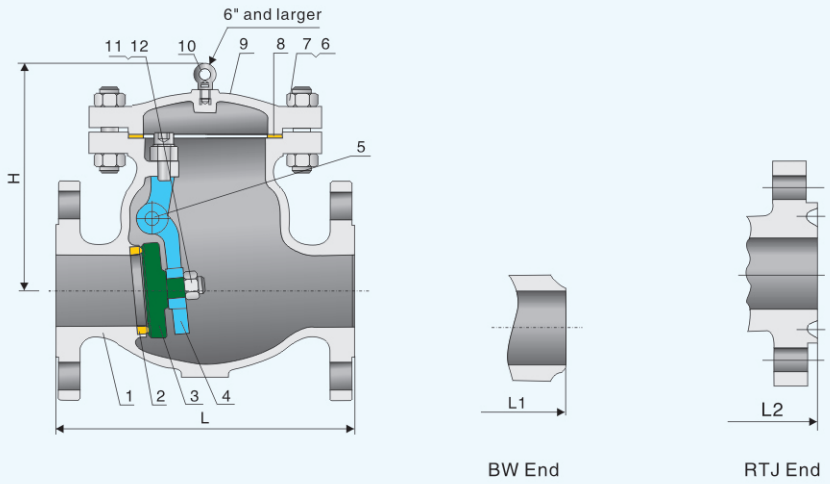

Parts List

No	Parts	Material
1	Body	ASTM A216 Gr.WCB
2	Seat ring	ASTM A105+13Cr
3	Disc	ASTM A216 Gr.WCB+13Cr
4	Hinge	ASTM A216 WCB
5	Hinge pin	ASTM A276 410
6	Cover bolt	ASTM A193 Gr.B7
7	Cover nut	ASTM A194 Gr.2H
8	Gasket	304S.S. Jacketed Graphite
9	Cover	ASTM A216 Gr.WCB
10	Eye bolt	C.S.
11	Nut	304S.S.
12	Washer	ASTM A276 410

Features

Design and manufacture: BS 1868, API 6D, ASME B16.34
Face–to–Face dimension: ASME B16.10, JIS B2002
Flanged dimension: 24" and smaller valves: ASME B16.5,
26" and larger valves: ASME B 16.47 series A and B
B. W. End: ASME B 16.25
Shell Wall Thickness: BS1868, ASME B16.34
26" and larger to manufacturer s standard
Inspection & Test: API 598, API 6D

Note: Available LCB, LCC, WC6, C5, WC9, C12, CF8, CF8M,4A, 5A etc for body material.And trim can be customized upon request.

Dimensions & Weights Class 150/10K

Valve Size	in. mm	1–1/2 40	2 50	2–1/2 65	3 80	4 100	5 125	6 150	8 200	10 250	12 300	14 350	16 400	18 450	20 500	24 600	30 750	36 900
L–L1 (RF–BW)	in. mm	6.5 165	8 203	8.5 216	9.5 241	11.5 292	13 330	14 356	19.5 495	24.5 622	27.5 698	31 787	34 864	38.5 978	38.5 978	51 1295	60 1524	77 1956
L2 (RTJ)	in. mm	7.0 178	8.5 216	9 229	10 254	12 305	13.5 343	14.5 369	20 508	25 635	28 711	31.5 800	34.5 877	39 991	39 991	51.5 1308	60.5 1537	77.5 1969
H (open)	in. mm	6.69 170	6.88 175	7 178	7.5 191	8.63 219	9.25 235	12.75 324	15.13 384	17.63 448	21.25 540	22 559	24.63 626	25.63 651	26.63 676	34.63 880	45.25 1149	53.13 1349
WT (kg)	RF BW	18 12	20 14	24 17	35 26	55 37	84 52	96 80	160 133	245 213	345 294	510 440	660 568	850 750	1050 920	1450 1270	2350 2250	3350 3150

Class 300 / JIS20K Bolted cover, swing type disc

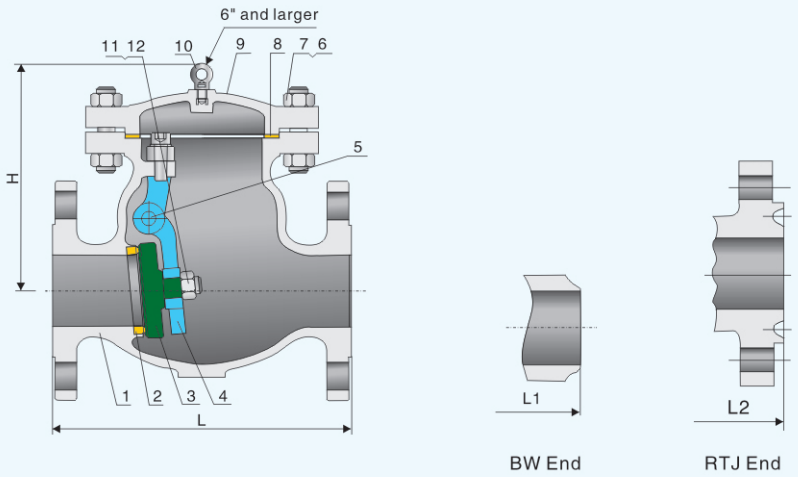

Parts List

No	Parts	Material
1	Body	ASTM A216 Gr.WCB
2	Seat ring	ASTM A105+13Cr
3	Disc	ASTM A216 Gr.WCB+13Cr
4	Hinge	ASTM A216 WCB
5	Hinge pin	ASTM A276 410
6	Cover bolt	ASTM A193 Gr.B7
7	Cover nut	ASTM A194 Gr.2H
8	Gasket	304S.S. Jacketed Graphite
9	Cover	ASTM A216 Gr.WCB
10	Eye bolt	C.S.
11	Nut	304S.S.
12	Washer	ASTM A276 410

Features

Design and manufacture: BS1868, API 6D, ASME B16.34
Face–to–Face dimension: ASME B16.10，JIS B2002
Flanged dimension: 24" and smaller valves: ASME B16.5
26" and larger valves: ASME B 16.47 series A and B
B. W. End: ASME B 16.25
Shell Wall Thickness: BS1868, ASME B16.34
26" and larger to manufacturer s standard
Inspection & Test: API 598, API 6D

Note: Available LCB, LCC, WC6, C5, WC9, C12, CF8, CF8M,4A, 5A etc for body material.And trim can be customized upon request.

Dimensions & Weights Class 300/20K

Valve Size	in. mm	1–1/2 40	2 50	2–1/2 65	3 80	4 100	5 125	6 150	8 200	10 250	12 300	14 350	16 400	18 450	20 500	24 600	30 750	36 900
L–L1 (RF–BW)	in. mm	9.5 241	10.5 267	11.5 292	12.5 318	14 356	15.75 400	17.5 444	21 533	24.5 622	28 711	33 838	34 864	38.5 978	40 1016	53 1346	62.75 1594	82 2083
L2 (RTJ)	in. mm	10 254	11.12 283	12.12 308	13.15 334	14.62 372	16.37 416	18.12 460	21.62 549	25.12 638	28.62 727	33.62 854	34.62 880	39.12 994	40.75 1035	53.88 1368	63.75 1619	83.11 2111
H (open)	in. mm	7.4 188	7.75 197	8 203	8.75 222	10.88 276	11.63 295	13.25 337	16.25 413	18.25 464	22.13 562	23.5 597	25.38 645	29.88 759	33.63 854	37 940	50 1270	60.63 1540
WT (kg)	RF BW	31 28	35 32	37 35	60 50	82 65	110 70	155 128	268 230	380 270	495 460	710 555	950 800	1200 970	1350 1070	2200 1780	3400 2950	5000 4300

Class 600 Bolted cover, swing type disc

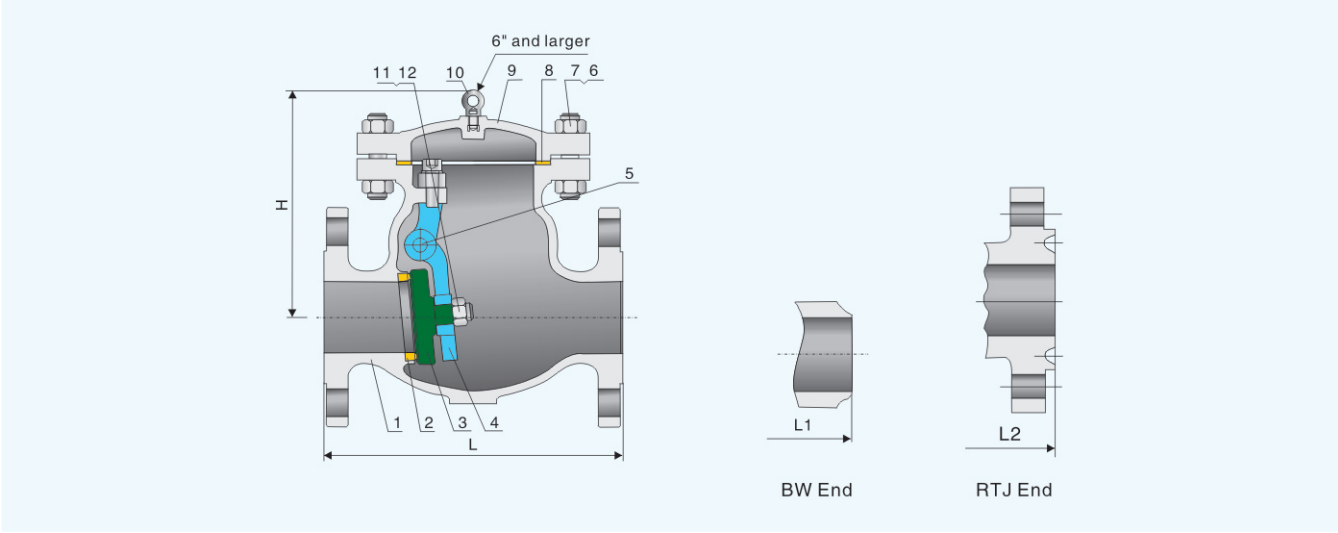

Parts List

No	Parts	Material
1	Body	ASTM A216 Gr.WCB
2	Seat ring	ASTM A105+13Cr
3	Disc	ASTM A216 Gr.WCB+13Cr
4	Hinge	ASTM A216 WCB
5	Hinge pin	ASTM A276 410
6	Cover bolt	ASTM A193 Gr.B7
7	Cover nut	ASTM A194 Gr.2H
8	Gasket	304S.S. Jacketed Graphite
9	Cover	ASTM A216 Gr.WCB
10	Eye bolt	C.S.
11	Nut	304S.S.
12	Washer	ASTM A276 410

Features

Design and manufacture: BS1868, API 6D, ASME B16.34
Face–to–Face dimension: ASME B16.10
Flanged dimension: 24" and smaller valves: ASME B16.5
26" and larger valves: ASME B 16.47 series A and B
B. W. End: ASME B 16.25
Shell Wall Thickness: BS1868, ASME B16.34
26" and larger to manufacturer s standard
Inspection & Test: API 598, API 6D

Note: Available LCB, LCC, WC6, C5, WC9, C12, CF8, CF8M,4A, 5A etc for body material.And trim can be customized upon request.

Dimensions & Weights

Valve Size	in. mm	2 50	2–1/2 65	3 80	4 100	6 150	8 200	10 250	12 300	14 350	16 400	18 450	20 500	24 600	26 650	28 700	30 750
L–L1 (RF–BW)	in. mm	11.5 292	13 330	14 356	17 432	22 559	26 660	31 787	33 838	35 889	39 991	43 1092	47 1194	55 1397	57 1448	63 1600	65 1651
L2 (RTJ)	in. mm	11.62 295	13.12 333	14.12 359	17.12 435	22.12 562	26.12 663	31.12 790	33.12 841	35.12 892	39.12 994	43.12 1095	47.25 1200	55.38 1407	57.5 1461	63.5 1613	65.5 1664
H (open)	in. mm	8.25 210	8.63 219	10.5 267	11.75 299	15 381	18.75 476	21.63 549	22.63 575	26.38 670	30.13 765	35.25 895	38.38 975	43.75 1111	48 1219	53.13 1349	56.25 1429
WT (kg)	RF BW	40 31	55 45	72 60	120 85	270 225	420 365	620 500	810 715	1100 880	1450 1140	1800 1450	2100 1650	3000 2300	3500 3000	4100 3500	5000 4300

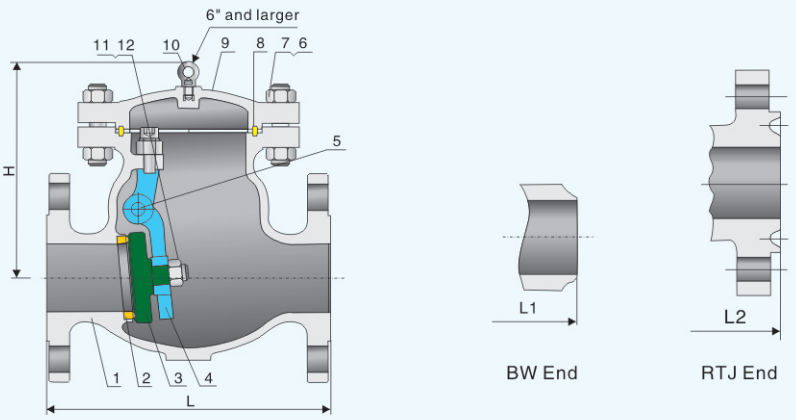

Parts List

No	Parts	Material
1	Body	ASTM A216 Gr.WCB
2	Seat ring	ASTM A105+13Cr
3	Disc	ASTM A216 Gr.WCB+13Cr
4	Hinge	ASTM A216 WCB
5	Hinge pin	ASTM A276 410
6	Cover bolt	ASTM A193 Gr.B7
7	Cover nut	ASTM A194 Gr.2H
8	Gasket	304S.S. Jacketed Graphite
9	Cover	ASTM A216 Gr.WCB
10	Eye bolt	C.S.
11	Nut	304S.S.
12	Washer	ASTM A276 410

Features

Design and manufacture: BS1868, API 6D, ASME B16.34
Face–to–Face dimension: ASME B 16.10
Flanged dimension: ASME B16.5
B.W. End: ASME B16.25
Shell Wall Thickness: BS1868, ASME B16.34
Inspection & Test: API 598, API 6D

Note: Available LCB, LCC, WC6, C5, WC9, C12, CF8, CF8M,4A, 5A etc for body material. And trim can be customized upon request.

Dimensions & Weights

	Valve Size	in. mm	2 50	2–1/2 65	3 80	4 100	6 150	8 200	10 250	12 300
Class 900	L–L1 (RF–BW)	in. mm	14.5 368	16.5 419	15 381	18 457	24 610	29 737	33 838	38 965
	L2 (RTJ)	in. mm	14.62 371	16.62 422	15.12 384	18.12 460	24.12 613	29.12 740	33.12 841	38.12 968
	H (open)	in. mm	12.63 321	13.75 349	12.63 321	16 406	18.88 479	22.25 565	26.13 664	30.5 775
	WT (kg)	RF BW	70 50	160 71	90 68	150 113	305 230	516 387	810 632	1120 901
Class 1500	L–L1 (RF–BW)	in. mm	14.5 368	16.5 419	18.5 470	21.5 546	27.75 705	32.75 832	39 991	44.5 1130
	L2 (RTJ)	in. mm	14.62 371	16.62 422	18.62 473	21.62 549	28 711	33.15 842	39.4 1001	45.12 1146
	H (open)	in. mm	12.63 321	13.75 349	14.38 365	16.5 419	20.13 511	26.75 680	29.75 756	33.75 857
	WT (kg)	RF BW	70 50	110 87	170 135	300 245	695 560	1190 965	1850 1480	2750 2180
Class 2500	L–L1 (RF–BW)	in. mm	17.75 451	20 508	22.75 578	26.5 673	36 914	40.25 1022	50 1270	56 1422
	L2 (RTJ)	in. mm	17.87 454	20.25 514	23 584	26.88 683	36.5 927	40.87 1038	50.88 1292	56.88 1444
	H (open)	in. mm	16.38 416	16.5 419	17.38 441	18.88 479	20.13 511	28 711	33.5 851	39.38 1000
	WT (kg)	RF BW	150 120	240 195	350 280	650 540	1450 1200	2550 2200	3950 3150	5700 4550

Class 900 / 1500 / 2500 Pressure seal cover, swing type disc

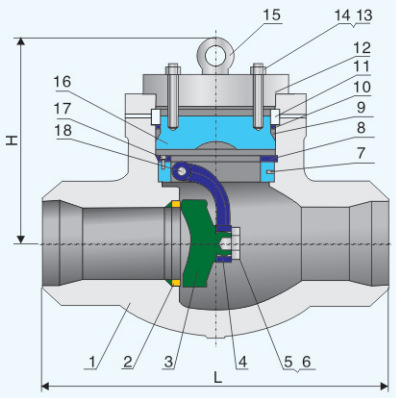

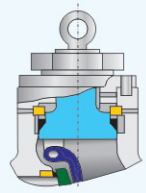

For 4" and smaller

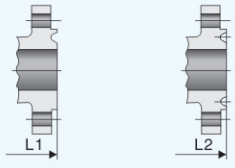

BW End RTJ End

Features

Design and manufacture: BS1868, API 6D, ASME B16.34
Face–to–Face dimension: ASME B16.10
Flanged dimension: ASME B16.5
Shell Wall Thickness: BS1868, ASME B16.34
Inspection & Test: API 598, API 6D

Note: Available LCB, LCC, WC6, C5, WC9, C12, CF8, CF8M,4A, 5A etc for body material. And trim can be customized upon request.

Parts List

No	Parts	Material	No	Parts	Material
1	Body	ASTM A216 Gr.WCB	10	Gasket	ASTM A182 F6a
2	Seat ring	ASTM A105+Stellite	11	Segment ring	ASTM A182 F6a
3	Disc	ASTM A216 Gr.WCB+13Cr	12	Cover	ASTM A216 Gr.WCB
4	Hinge	ASTM A216 Gr.WCB	13	Stud	ASTM A193 Gr.B7
5	Screw pin	ASTM A276 410	14	Nut	ASTM A194 Gr.2H
6	Screw	ASTM A276 410	15	Eyebolt	C.S.
7	Locking pin	ASTM A276 410	16	Bonnet	ASTM A216 Gr.WCB
8	Locking ring	ASTM A105	17	Bolt	S.S.
9	Seal ring	ASTM A182 F304	18	Pin	ASTM A276 410

Dimensions & Weights

Class 900	Valve Size	in. mm	2 50	2–1/2 65	3 80	4 100	6 150	8 200	10 250	12 300	14 350	16 400
	L (BW)	in. mm	8.5 216	10 254	12 305	14 356	20 508	26 660	30 787	36 914	39 991	43 1092
	L1 (RF)	in. mm	14.5 368	16.5 419	15 381	18 457	24 610	29 737	33 838	38 965	40.5 1029	44.5 1130
	L2 (RTJ)	in. mm	14.62 371	16.62 422	15.12 384	18.12 460	24.12 613	29.12 740	33.12 841	38.12 968	40.88 1038	44.88 1140
	H (open)	in. mm	7.4 188	8.27 210	8.27 210	8.5 216	14.5 368	20.12 511	24.17 614	27.76 705	28.98 736	29.76 756
	WT (kg)	RF BW	48 33	63 44	60 42	122 76	254 177	511 383	938 703	1448 1128	1723 1353	1832 1463
Class 1500	L (BW)	in. mm	8.5 216	10 254	12 305	16 406	22 559	28 711	34 864	39 991	42 1067	47 1194
	L1 (RF)	in. mm	14.5 368	16.5 419	18.5 470	21.5 546	27.75 705	32.75 832	39 991	44.5 1130	49.5 1257	54.5 1384
	L2 (RTJ)	in. mm	14.62 371	16.62 422	18.62 473	21.62 549	28 711	33.13 841	39.38 1001	45.12 1146	50.25 1276	55.38 1407
	H (open)	in. mm	10.43 265	10.43 265	10.63 270	14.57 370	18.7 475	22.44 570	24.8 630	30.31 770	31.3 795	32.44 824
	WT (kg)	RF BW	58 40	73 51	71 69	128 84	332 228	588 458	1023 713	1528 1148	1852 1388	2058 1542
Class 2500	L (BW)	in. mm	11 279	13 330	14.5 368	18 457	24 610	30 762	36 914	41 1041	–	–
	L1 (RF)	in. mm	17.75 451	20 508	22.75 578	26.5 673	36 914	40.25 1022	50 1270	56 1422	–	–
	L2 (RTJ)	in. mm	17.87 454	20.25 514	23 584	26.88 683	36.5 927	40.87 1038	50.88 1292	56.88 1444	–	–
	H (open)	in. mm	11.02 280	12 305	12.2 310	14.57 370	19.1 485	21.42 544	27.95 710	31.5 800	–	–
	WT (kg)	RF BW	86 52	113 88	133 93	213 158	548 383	988 638	1598 1198	2298 1723	–	–

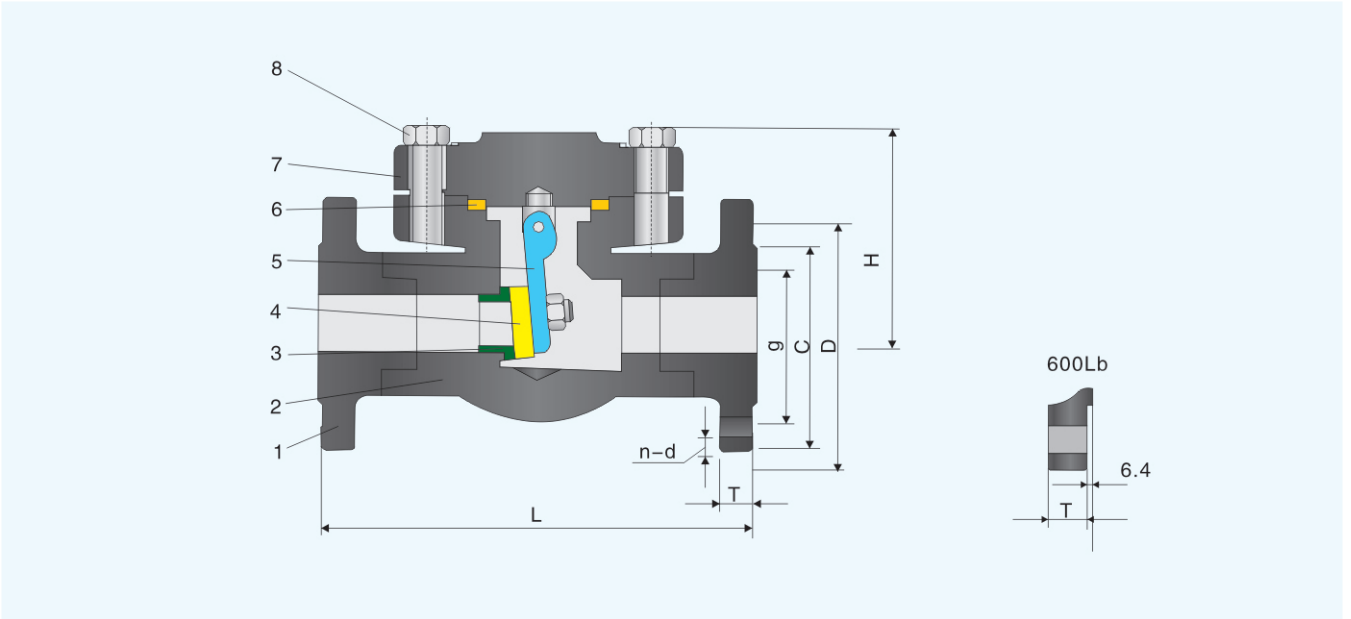

Main parts and materials

No	Parts	Material
1	Flange	A105
2	Body	A105
3	Seat	13Cr
4	Disc	13Cr
5	Rocker	13Cr
6	Gasket	SS304+Graphite
7	Bonnet	A105
8	Bolt	A193–B7

Technical specification

1、Design and manufacture: API 602, BS 5352
2、Construction feature: Bolted cover or welded cover. Also available pressure seal cover for high pressure application.
3、Face to face dimensions: ANSI B 16.10
4、Flanged connection: ANSI B16.5.
5、Test and inspection: API 598.
6、Available LF2, F5, F9, F11, F22, F304(L), F316(L), aluminium bronze, inconel, monel etc for body material. And trim can be customized upon request.

Dimensions and weights

DN		Class	L	D	C	g	T	n–d	H(Open)		WT(Kg)	
inch	mm								Reduced Bore	Full Bore	Reduced Bore	Full Bore
1/2"	15	150	108	90	60.5	35	11.5	4–16	61	61	4.5	6.9
		300	140	95	66.5		14.5	4–16			4.8	7.7
		600	165	95	66.5		14.5	4–16			5.6	7.8
3/4"	20	150	117	100	70	43	13	4–16	61	78	6.9	9.8
		300	152	115	82.5		16	4–19			7.7	11.3
		600	190	115	82.5		16	4–19			7.8	12.5
1"	25	150	127	110	79.5	51	14.5	4–16	78	84	9.8	13.5
		300	216	125	89		18	4–19			11	16.8
		600	216	125	89		18	4–19			12.5	17.5
1 1/4"	32	150	140	119	89	63	16	4–16	84	101	13.5	19.5
		300	229	135	98.5		19.5	4–19			16.8	21.2
		600	229	135	98.5		21	4–19			17	23.5
1 1/2"	40	150	165	125	98.5	73	18	4–16	101	120	19.5	28.5
		300	241	155	114.5		21	4–22.5			21.2	32.6
		600	241	155	114.5		22.5	4–22.5			23.5	38.5
2"	50	150	203	150	120.5	92	19.5	4–19	120	133	28	30.3
		300	267	165	127		22.5	8–19			32.6	35
		600	292	165	127		26	8–19			38.8	42.2

Class 800 Forged steel swing check valve

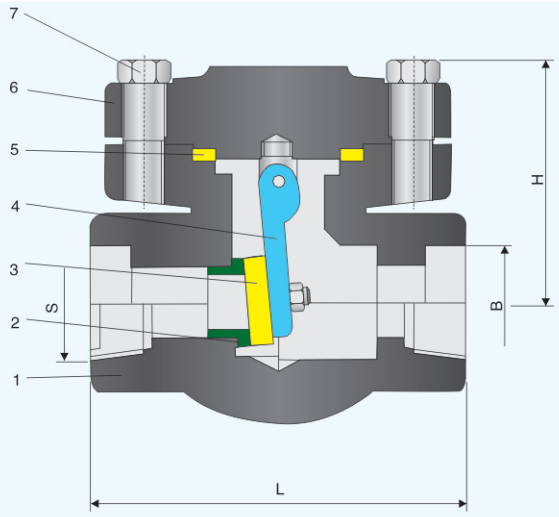

Main parts and materials

No	Parts	Material
1	Body	A105
2	Seat	13Cr
3	Disc	13Cr
4	Rocker	13Cr
5	Gasket	SS304+Graphite
6	Bonnet	A105
7	Bolt	A193–B7

Technical specification

1、Design and manufacture: API 602, BS 5352
2、Construction feature: Bolted cover or welded cover. Also available pressure seal cover for high pressure application.
3、FNPT connection: ANSI B1.20.1
Socket weld connection: ANSI B 16.11
4、Test and inspection: API 598.
5、Available LF2, F5, F9, F11, F22, F304(L), F316(L), aluminium bronze, inconel, monel etc for body material. And trim can be customized upon request.

NOTE: For pressure class 900, 1500, 2500, please contact us for dimension and weight.

Dimensions and weights

DN				L	B(SW)				S(Screwed)				H(open)	WT(kg)
inch		mm			ANSI		JIS		ANSI		ISO、BS、JIS			
									NPT 600		RC or PT 550			
Reduced Bore	Full Bore	Reduced Bore	Full Bore		Reduced Bore	Full Bore	Reduced Bore	Full Bore	Reduced Bore	Full Bore	Reduced Bore	Full Bore		
1/2"	–	15	–	80	21.8	–	22.2	–	1/2"	–	1/2"	–	61	1.0
3/4"	1/2"	20	15	92	27.1	21.8	27.7	22.2	3/4"	1/2"	3/4"	1/2"	61	1.1
1"	3/4"	25	20	111	33.8	27.1	34.5	27.7	1"	3/4"	1"	3/4"	78	1.9
1 1/4"	1"	32	25	120	42.6	33.8	43.2	34.5	1 1/4"	1"	1 1/4	1"	94	3.4
1 1/2"	1 1/4"	40	32	120	48.7	42.6	49.1	43.2	1 1/2"	1 1/4"	1 1/2"	1 1/4"	101	4.5
2"	1 1/2"	50	40	140	61.1	48.7	61.1	49.1	2"	1 1/2"	2"	1 1/2"	120	7.3
–	2"	–	50	170	–	61.1	–	61.1	–	2"	–	2"	133	10

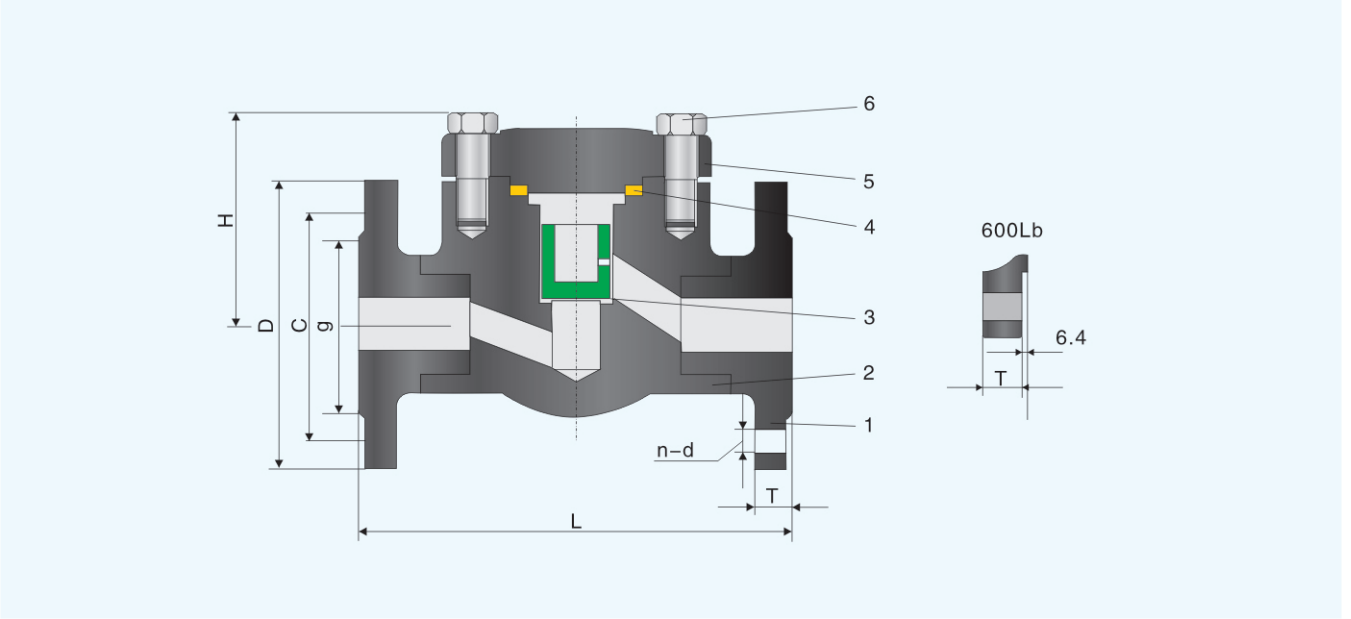

Main parts and materials

No	Parts	Material
1	Flange	A105
2	Body	A105
3	Disc	13Cr
4	Gasket	SS304+Graphite
5	Bonnet	A105
7	Bolt	A193–B7

Technical specification

1、Design and manufacture: API 602, BS 5352
2、Construction feature: Bolted cover or welded cover. Also available pressure seal cover for high pressure application.
3、Face to face dimensions: ANSI B 16.10
4、Flanged connection: ANSI B16.5
5、Test and inspection: API 598
6、Available LF2, F5, F9, F11, F22, F304(L), F316(L), aluminium bronze, inconel, monel etc for body material. And trim can be customized upon request.

Dimensions and weights

DN		Class	L	D	C	g	T	n–d	H(Open)		WT(Kg)	
inch	mm								Reduced Bore	Full Bore	Reduced Bore	Full Bore
1/2"	15	150	108	90	60.5	35	11.5	4–16	61	61	2.56	3.37
		300	152	95	66.5		14.5	4–16			2.73	3.65
		600	165	95	66.5		14.5	4–16			3.00	4.00
3/4"	20	150	117	100	70	43	13	4–16	61	78	3.37	4.37
		300	178	115	82.5		16	4–19			3.65	4.74
		600	190	115	82.5		16	4–19			4.00	5.83
1"	25	150	127	110	79.5	51	14.5	4–16	78	84	4.67	8.17
		300	203	125	89		18	4–19			4.74	8.77
		600	216	125	89		18	4–19			5.83	9.47
1 1/4"	32	150	140	115	89	63	16	4–16	84	101	8.17	8.94
		300	216	135	98.5		19.5	4–19			8.77	9.60
		600	229	133	98.5		21	4–19			9.47	10.1
1 1/2"	40	150	165	125	98.5	73	18	4–16	103	120	8.94	12.04
		300	229	155	114.5		21	4–22.5			9.60	13.70
		600	241	155	114.5		22.5	4–22.5			10.10	15.61
2"	50	150	207	150	120.5	92	19.5	4–19	118	133	12.64	14.3
		300	267	165	127		22.5	8–19			13.70	17.8
		600	292	165	127		26	8–19			15.61	24.6

Class 800 Forged steel lifting check valve

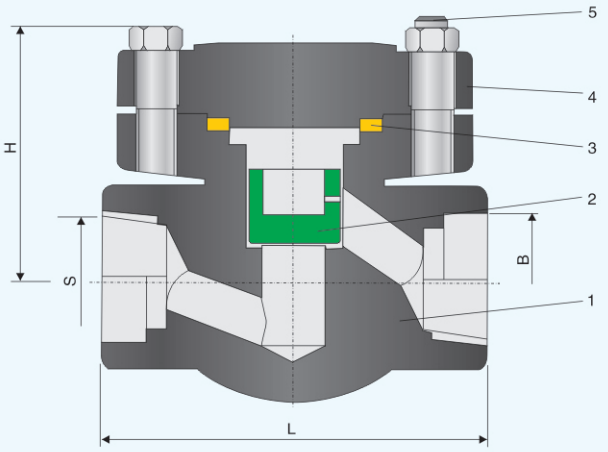

Main parts and materials

No	Parts	Material
1	Body	A105
2	Disc	13Cr
3	Gasket	SS304+Graphite
4	Bonnet	A105
6	Bolt	A193–B7

Technical specification

1、Design and manufacture: API 602, BS 5352
2、Construction feature: Bolted cover or welded cover. Also available pressure seal cover for high pressure application.
3、FNPT connection: ANSI B1.20.1
Socket weld connection: ANSI B 16.11
4、Test and inspection: API 598
5、Available LF2, F5, F9, F11, F22, F304(L), F316(L), aluminium bronze, inconel, monel etc for body material. And trim can be customized upon request.

NOTE: For pressure class 900, 1500, 2500, please contact us for dimension and weight.

Dimensions and weights

DN				L	B(SW)				S(Screwed)				H(open)	WT(kg)
inch		mm			ANSI		JIS		ANSI		ISO、BS、JIS			
									NPT 600		RC or PT 550			
Reduced Bore	Full Bore	Reduced Bore	Full Bore		Reduced Bore	Full Bore	Reduced Bore	Full Bore	Reduced Bore	Full Bore	Reduced Bore	Full Bore		
1/2"	–	15	–	80	21.8	–	22.2	–	1/2"	–	1/2"	–	61	1.2
3/4"	1/2"	20	15	92	27.1	21.8	27.7	22.2	3/4"	1/2"	3/4"	1/2"	61	1.4
1"	3/4"	25	20	111	33.8	27.1	34.5	27.7	1"	3/4"	1"	3/4"	78	2.3
1 1/4"	1"	32	25	120	42.6	33.8	43.2	34.5	1 1/4"	1"	1 1/4	1"	94	3.9
1 1/2"	1 1/4"	40	32	152	48.7	42.6	49.1	43.2	1 1/2"	1 1/4"	1 1/2"	1 1/4"	103	5.6
2"	1 1/2"	50	40	172	61.1	48.7	61.1	49.1	2"	1 1/2"	2"	1 1/2"	118	8.9
–	2"	–	50	200	–	61.1	–	61.1	–	2"	–	2"	132	12.5

Class 150~300 Wafer type single-disc swing check valve

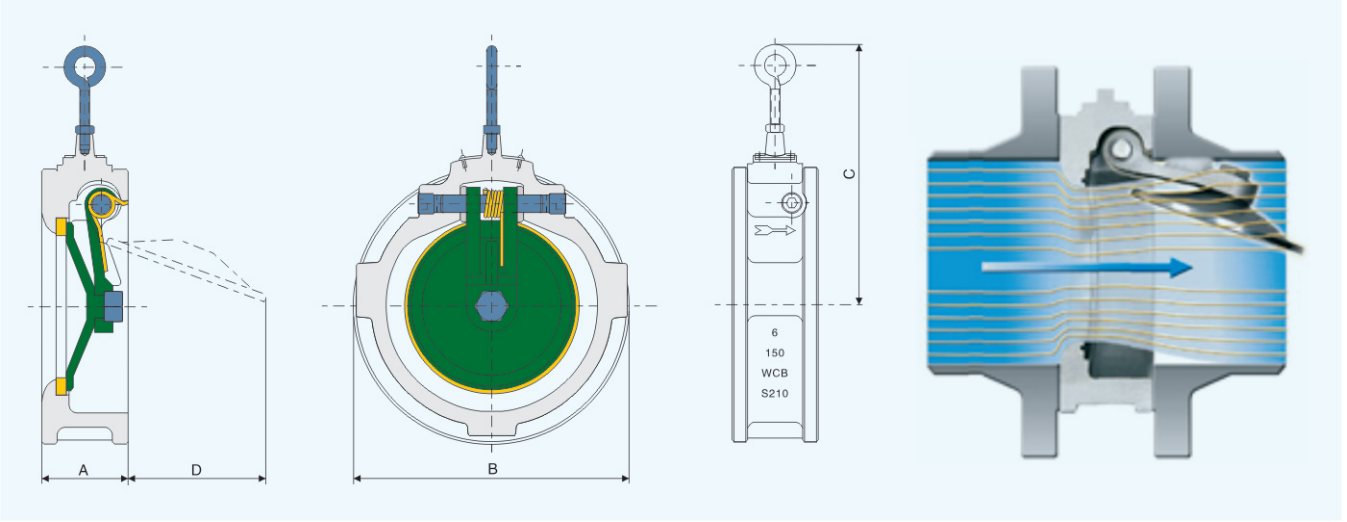

Main parts and materials

Parts	Material
Body	WCB, LCB, LCC, CF8, CF8M, CF3, CF3M
Disc	WCB, LCB, LCC, CF8, CF8M, CF3, CF3M
Seat	Cr13, 304, 316, Stellite or Integral on body
Spring	304, 316, 17-7PH, Inconel
Bolt	A193 B7 / B7M, ASTM A320 L7 L7M, ASTM A193 B8 / B8M

Technical specification

1、Design and manufacture: API 594, API 6D, ASME B16.34
2、Consturction feature: single disc, swing type
3、End connection per ANSI B16.5 or ANSI B16.47
4、Test and inspection per API 598
5、Available Class 600~900, please contact for more information.

Dimensions & Weight, Class 150

NPS	A(mm)		B(mm)	C(mm)	D(mm)	Weight(kg)	
	Short Type	Long Type				Short	Long
2	44	60	104	108	31	2.2	3
3	51	73	137	127	41	4.2	6.5
4	57	73	175	146	70	6.8	9.7
5	63	82	197	165	92	9	11.4
6	70	98	222	185	114	11.2	17
8	73	127	280	210	146	17	32.5
10	79	146	340	245	191	25	44
12	86	181	410	273	223	42	77
14	108	184	448	330	184	58	100
16	108	191	511	368	210	65	114
18	108	203	546	387	267	86	160
20	140	219	603	476	280	116	180
24	152	222	716	521	381	193	279

Dimensions & Weight, Class 300

NPS	A(mm)		B(mm)	C(mm)	D(mm)	Weight(kg)	
	Short Type	Long Type				Short	Long
2	45	60	111	108	30	2	4.2
3	51	73	149	127	43	4	7.7
4	57	73	181	146	62	6	11.2
5	63	82	216	165	82	9.5	14
6	70	98	251	184	108	13	21.5
8	73	127	308	210	136	21	38
10	79	146	362	244	178	31	54
12	86	181	422	273	206	47	99
14	222	222	486	330	184	143	143
16	232	232	540	368	210	176	176
18	264	264	597	387	267	220	220
20	292	292	654	476	280	286	286
24	317.5	318	774	520	381	462	462

Wafer type dual plate check valve

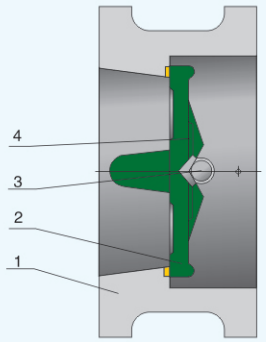

Dual plate check valve

Standards

1、Design and manufacture：API 594、API 6D；
2、Face to Face：API 594、API 6D；DIN 3202；
3、Pressure–temperature ratings：ASME B 1 6. 34；
4、Inspection and test：API 598、API 6D；
5、End flange dimension：ASME B16.5、ASME B16.47、API605、MSS SP–44、IS07005–1、DIN2543—2548、

Structure features

1、It is short in face to face dimensions,being 1/4–1/8 times that of traditional flanged type check valve
2、It is impact in volume size and light in weight of about 1/4–1/20 times that of traditional flange type check valvc.
3、The disc closes quickly with less water hammer pressure.
4、It is convenient in installation,being available for use on level or ve~ical pipelines.
5、Flow passage is fluent with less flow resistance.
6、It acts sensitively with good sealing effect.
7、Disc travel is short with less impact force caused by valve closing.
8、It is impact in intcgral structure with nice outline view.
9、It is longer for service life with high reliability.

Materials for main parts

Part Name		Material							
1	Body	A216WCB	A352LCB	A217WC6	A217WC9	A217C5	A217C12	A351CF8	A351CF8M
2	Disc	A351CF8	A351CF8	A217WC6	A217WC9	A217C5	A217C12	A351CF8	A351CF8M
4	Stem	A182F6a	A182F304	A182F304	A182F304	A182F304	A182F304	A182F304	A182F316
3	Spring	Stainles steel/inconel							

Noted：The chart above only lists out some common composition of wafer type steel swing check valve pans We may provide other different parts material composition according to the customer's request or the actual valve working conditlon

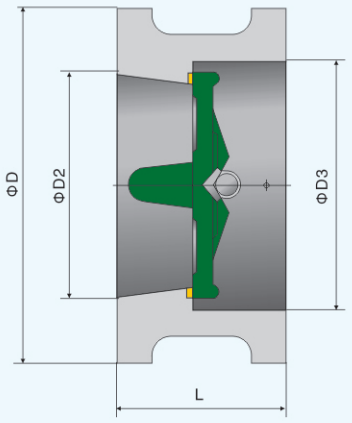

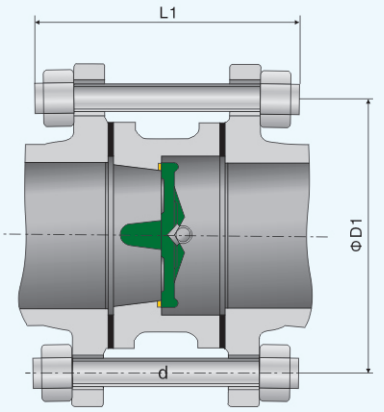

Dimensions and weights

Class	Size		Dimensions(mm)				Weight (kg)	Pipeline flanges					
	NPS	DN	L	D	D2	D3		D1	Number of bolts	d		L1	
										In	mm	RF	RTJ
150	2	50	60	103	51	56	2	120.5	4	5/8	M16	140	155
	2 1/2	65	67	122	65	73	3	139.5	4	5/8	M16	150	165
	3	80	73	135	80	88	4	152.5	4	5/8	M16	160	175
	4	100	73	173	102	108	6	190.5	4	5/8	M16	170	185
	5	125	86	195	127	132	8	216.0	8	3/4	M20	190	205
	6	150	98	220	152	160	13	241.5	8	3/4	M20	205	220
	8	200	127	277	203	210	25	298.5	8	3/4	M20	240	255
	10	250	146	337	254	266	39	362.0	12	7/8	M24	270	285
	12	300	181	407	305	310	54	432.0	12	7/8	M24	310	325
	14	350	184	448	350	355	80	476.0	12	1	M27	325	340
	16	400	191	512	400	405	117	540.0	16	1	M27	340	355
	18	450	203	547	450	455	138	578.0	16	11/8	M30	365	380
	20	500	219	604	500	505	163	635.0	20	11/8	M30	385	400
	24	600	222	715	600	605	331	749.5	20	11/4	M33	405	420
	28	700	305	773	700	700	380	795.5	40	3/4	M20	455	–
	30	750	305	824	746	750	425	846.0	44	3/4	M20	455	–
	32	800	305	878	796	800	560	900.0	48	3/4	M20	460	–
	36	900	368	983	898	910	640	1009.5	44	7/8	M24	540	–
	42	1050	432	1142	1050	1055	960	1171.5	48	1	M27	625	–
	48	1200	524	1302	1200	1205	1400	1335.0	44	11/8	M30	740	–
300	2	50	60	110	51	58	3	127.0	8	5/8	M16	155	175
	2 1/2	65	67	128	65	73	4	149.0	8	3/4	M20	175	195
	3	80	73	147	80	88	6	168.5	8	3/4	M20	190	210
	4	100	73	179	102	108	8	200.0	8	3/4	M20	195	215
	5	125	86	214	127	132	15	235.0	8	3/4	M20	215	235
	6	150	98	249	152	16 0	18	270.0	12	3/4	M20	230	250
	8	200	127	305	203	210	31	330.0	12	7/8	M24	280	300
	10	250	146	359	254	266	51	387.5	16	1	M27	315	335
	12	300	181	420	305	310	77	451.0	16	11/8	M30	365	385
	14	350	222	483	350	355	117	514.5	20	11/8	M30	410	430
	16	400	232	537	400	405	190	571.5	20	11/4	M33	435	455
	18	450	264	594	450	455	200	628.5	24	11/4	M33	475	495
	20	500	292	652	500	505	265	686.0	24	11/4	M33	510	535
	24	600	318	772	600	608	410	813.0	24	11/2	M39	560	585
	30	750	368	882	735	740	660	921.0	36	13/8	M36	650	–
	36	900	483	1044	873	880	1020	1089.0	32	15/8	M42	800	–
	42	1050	568	1196	1035	1045	1540	1244.5	36	13/4	M45	920	–
	48	1200	629	1365	1179	1190	2260	1416.0	40	17/8	M48	1010	–

Dimensions and weights

Class	Size		Dimensions(mm)				Weight (kg)	Pipeline flanges					
	NPS	DN	L	D	D2	D3		D1	Number of bolts	d		L1	
										In	Mm	RF	RTJ
600	2	50	60	110	51	58	4	127.0	8	5/8	M16	175	180
	2 1/2	65	67	128	65	73	5	149.0	8	3/4	M20	195	200
	3	80	73	147	80	88	8	168.5	8	3/4	M20	210	215
	4	100	79	191	102	108	11	216.0	8	7/8	M24	235	240
	5	125	105	239	127	136	20	267.0	8	1	M27	280	285
	6	150	136	264	152	162	26	292.0	12	1	M27	320	325
	8	200	165	318	200	212	55	349.0	12	11/8	M30	370	375
	10	250	213	398	250	266	95	432.0	16	11/4	M33	440	445
	12	300	229	455	305	312	140	489.0	20	11/4	M33	460	465
	14	350	273	490	337	355	223	527.0	20	13/8	M36	520	525
	16	400	305	562	387	400	360	603.0	20	11/2	M39	575	580
	18	450	362	610	438	450	395	654.0	20	15/8	M42	650	655
	20	500	368	680	489	500	18	724.0	24	15/8	M42	670	680
	24	600	438	786	591	600	836	838.0	24	17/8	M48	780	790
900	2	50	70	140	51	58	8	165.0	8	7/8	M24	225	230
	2 1/2	65	83	162	65	73	11	190.5	8	1	M27	250	255
	3	80	83	165	80	90	14	190.5	8	7/8	M24	240	245
	4	100	102	204	102	108	20	235.0	8	11/8	M30	285	290
	5	125	110	245	127	136	30	279.5	8	11/4	M33	310	315
	6	150	159	286	150	16 2	42	317.5	12	11/8	M30	365	370
	8	200	206	356	200	212	84	393.5	12	13/8	M36	440	445
	10	250	241	432	250	266	145	470.0	16	13/8	M36	490	495
	12	300	292	495	305	312	220	533.5	20	13/8	M36	560	565
	14	350	356	518	337	355	350	559.0	20	11/2	M39	645	655
	16	400	384	572	387	400	470	616.0	20	15/8	M42	685	695
	18	450	451	635	438	450	605	686.0	20	17/8	M48	790	805
	20	500	451	695	487	496	820	749.5	20	2	M52	810	825
	24	600	495	835	591	600	1050	901.5	20	21/2	M64	945	965
1500	2	50	70	140	51	58	8	165.0	8	7/8	M24	225	230
	2 1/2	65	83	162	65	73	11	190.5	8	1	M27	250	255
	3	80	83	172	80	90	19	203.0	8	11/8	M30	270	275
	4	100	102	207	102	108	26	241.5	8	11/4	M33	310	315
	5	125	110	252	127	136	51	292.0	8	11/2	M39	370	375
	6	150	159	280	150	162	68	317.5	12	13/8	M36	430	440
	8	200	206	350	200	212	130	393.5	12	15/8	M42	510	520
	10	250	248	433	254	266	210	482.5	12	17/8	M48	600	610
	12	300	305	518	305	312	384	571.5	16	2	M52	695	715
	14	350	356	576	337	355	550	635.0	16	21/4	M56	775	800
	16	400	384	639	387	400	635	705.0	16	11/2	M64	850	880
2500	2	50	70	143	42	48	10	171.5	8	1	M27	255	260
	2 1/2	65	83	166	52	58	18	197.0	8	11/8	M30	290	305
	3	80	86	194	62	68	26	228.5	8	11/4	M33	320	330
	4	100	105	232	88	94	40	273.0	8	11/2	M39	370	380
	5	125	110	277	100	106	59	324.0	8	13/4	M45	420	435
	6	150	159	315	150	162	90	368.5	8	2	M52	515	530
	8	200	206	385	180	186	150	438.0	12	2	M52	600	620
	10	250	254	474	225	232	240	539.5	12	21/2	M64	750	775
	12	300	305	547	266	272	440	619.0	12	23/4	M70	855	885

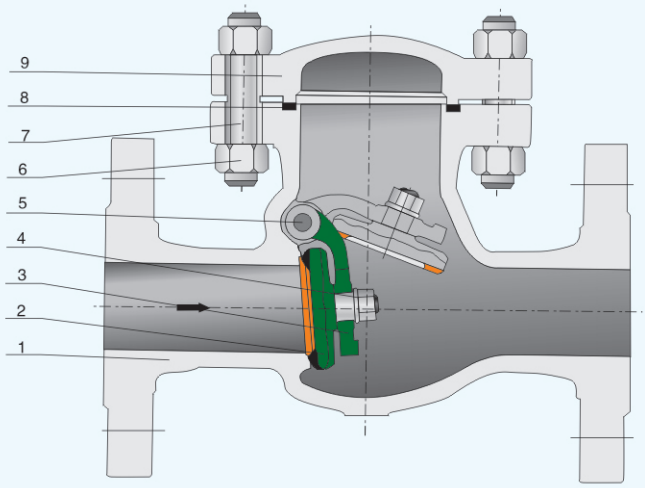

Standards

Design and Manufacture: DIN3840，BS EN 1868
Face to Face Dimensions: DIN3202，BS EN 558-1
Flange ends Dimensions: DIN2543，BS EN 1092-1
DIN2544，DIN2545，DIN2546，DIN2548
Test & Inspect: DIN 3230，BS EN 12569

Parts and material list

Part Name		Material				
1	Body	DIN 17245 GS-C25+CR13	DIN 17245 GS-C25+STL	DIN 17245 GS-C25+STL	DIN 17445 1.4308	DIN 17445 1.4408
2	Disc	DIN 17245 GS-C25+CR13	DIN 17245 GS-C25+CR13	DIN 17245 GS-C25+STL	DIN 17445 1.4308	DIN 17445 1.4408
9	Cover	DIN 17245 GS-C25	DIN 17245 GS-C25	DIN 17245 GS-C25	DIN 17445 1.4308	DIN 17445 1.4408
3	Arm	DIN 17245 GS-C25	DIN 17245 GS-C25	DIN 17245 GS-C25	DIN 17445 1.4308	DIN 17445 1.4408
5	Pin	ASTM A 182 F6a	ASTM A 182 F6a	ASTM A 182 F6a	ASTM A182 F304	ASTM A182 F316
6	Nut	ASTM A194 2H			ASTM A194 8	ASTM A194 8
7	Bolt	ASTM A193 B7			ASTM A193 B8	ASTM A193 B8
4	Nut	ASTM A194 2H			ASTM A182 F304	ASTM A182 F316
8	Gasket	SS Spiral Wound W/graphite,or SS Spiral Wound W/PTFE,or Reinforced PTFE				

Noted：The chart above only lists out some common composition of steel check valve. We may provide other different parts material composition according to the customer's request or the actual valve working conditlon

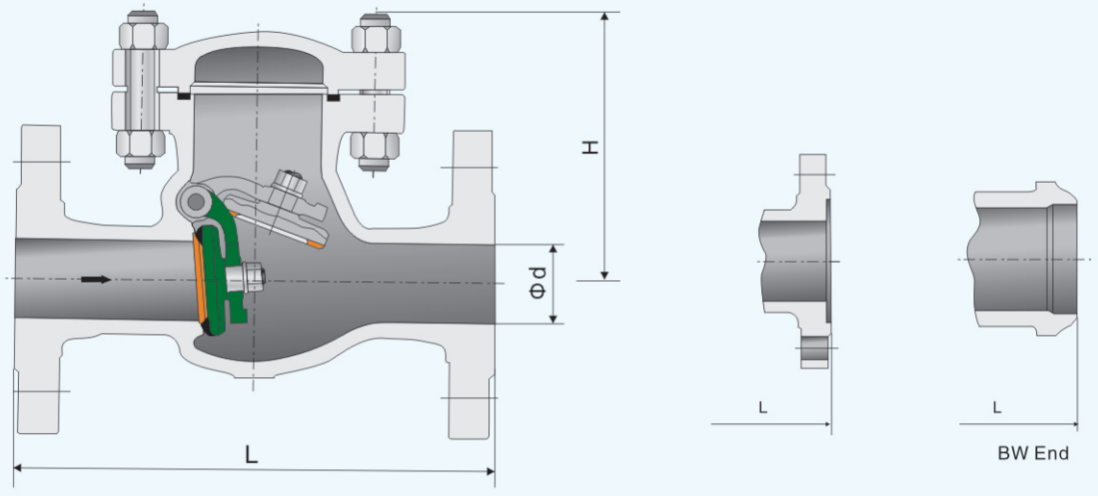

Dimensions & Weights

PN16(DIN 3202–F6)																		
DN	40	50	65	80	100	125	150	200	250	300	350	400	450	500	600	700	800	900
H	180	200	240	260	300	350	400	500	600	700	800	900	1000	1100	1300	1500	1700	1900
W	129	147	161	178	190	265	285	345	394	420	455	520	565	610	740	895	1240	1450
W(kg)	13	16	23	31	40	53	80	116	216	316	440	513	582	800	1158	1380	1540	1790
PN25(DIN 3202–F6)																		
DN	40	50	65	80	100	125	150	200	250	300	350	400	450	500	600	700	800	900
H	180	200	240	260	300	350	400	500	600	700	800	900	1000	1100	1300	1500	1700	1900
W	129	147	161	178	190	265	285	345	394	420	455	520	565	610	740	895	1240	1450
W(kg)	14	20	27	44	55	88	145	213	297	375	495	545	600	815	1200	1400	1620	1830
PN40(DIN 3202–F1)																		
DN	40	50	65	80	100	125	150	200	250	300	350	400	450	500	600	700	800	900
H	200	230	290	310	350	400	480	600	730	850	980	1100	1200	1250	1450	1650	1850	2050
W	135	152	178	185	210	290	310	365	145	480	510	545	595	655	860	–	–	–
W(kg)	15	22	29	40	46	58	92	168	310	430	558	780	915	1170	1350	–	–	–
PN63(DIN 3202–F2)																		
DN	40	50	65	80	100	125	150	200	250	300	350	400	450	500	600	–	–	–
H	260	300	340	380	430	500	550	650	775	900	1025	1150	1275	1400	1600	–	–	–
W	168	175	192	225	280	2108	335	390	452	520	570	626	695	770	905	–	–	–
W(kg)	40	48	62	80	114	187	214	329	418	640	911	1130	1320	1693	2015	–	–	–
PN100(DIN 3202–F2)																		
DN	40	50	65	80	100	125	150	200	250	300	350	400	450	500	600	–	–	–
H	260	300	340	380	430	500	550	650	775	900	1025	1150	1275	1400	1600	–	–	–
W	165	183	205	236	272	305	345	398	456	528	600	685	–	–	–	–	–	–
W(kg)	48	65	73	87	105	192	208	370	668	963	1100	1358	–	–	–	–	–	–

Noted: The face to face demension of BW–end–valve is the same as that of flanged–end–valve.

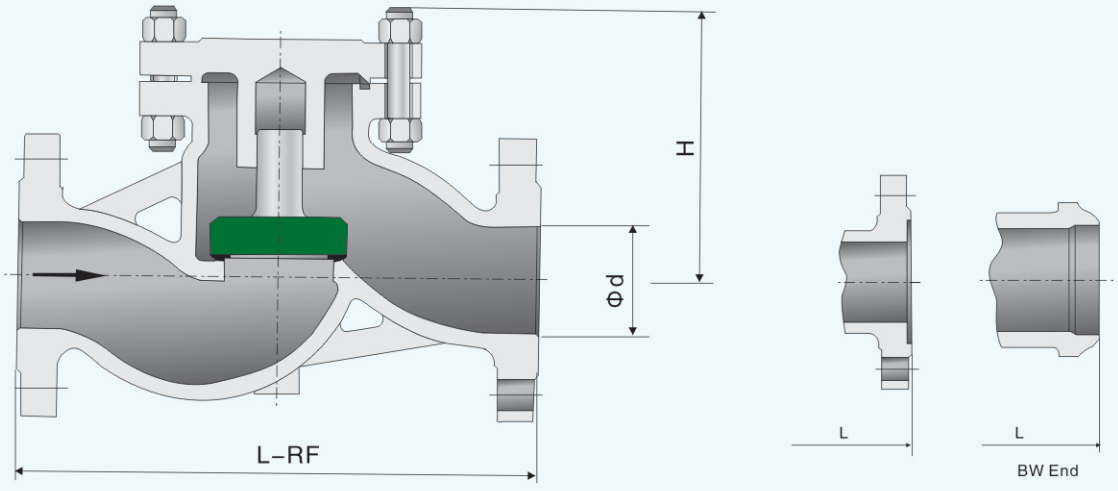

Dimensions

PN16(DIN 3202-F1)																	
DN	mm	15	20	25	32	40	50	65	80	100	125	150	200	250	300	350	400
L-RF	mm	130	150	160	180	200	230	290	310	350	400	480	600	730	850	980	1100
L-BW	mm	130	150	160	180	200	230	290	310	350	400	480	600	730	850	980	1100
H	mm	77	77	80	85	95	105	120	130	140	155	180	215	260	315	–	–
PN25(DIN 3202-F1)																	
DN	mm	15	20	25	32	40	50	65	80	100	125	150	200	250	300	350	400
L-RF	mm	130	150	160	180	200	230	290	310	350	400	480	600	730	850	980	1100
L-BW	mm	130	150	160	180	200	230	290	310	350	400	480	600	730	850	980	1100
H	mm	100	105	120	130	135	149	160	169	194	222	255	305	355	410	–	–
PN40(DIN 3202-F1)																	
DN	mm	15	20	25	32	40	50	65	80	100	125	150	200	250	300	–	–
L-RF	mm	130	150	160	180	200	230	290	310	350	400	480	600	730	850	–	–
L-BW	mm	130	150	160	180	200	230	290	310	350	400	480	600	730	850	–	–
H	mm	100	105	120	130	135	149	160	169	194	222	255	305	360	415	–	–
PN63(DIN 3202-F2)																	
DN	mm	15	20	25	32	40	50	65	80	100	125	150	200	250	300	–	–
L-RF	mm	210	230	230	260	260	300	340	380	430	500	550	650	775	900	–	–
L-BW	mm	210	230	230	260	260	300	340	380	430	500	550	650	775	900	–	–
H	mm	100	110	125	140	168	170	188	205	230	240	265	310	–	–	–	–
PN100(DIN 3202-F2)																	
DN	mm	15	20	25	32	40	50	65	80	100	125	150	200	250	300	–	–
L-RF	mm	210	230	230	260	260	300	340	380	430	500	550	650	775	900	–	–
L-BW	mm	210	230	230	260	260	300	340	380	430	500	550	650	775	900	–	–
H	mm	100	110	125	140	170	185	200	235	265	310	350	400	–	–	–	–

Noted: The face to face demension of BW-end-valve is the same as that of flanged-end-valve.